HOWE

Side chair
Veneer/Polyamide

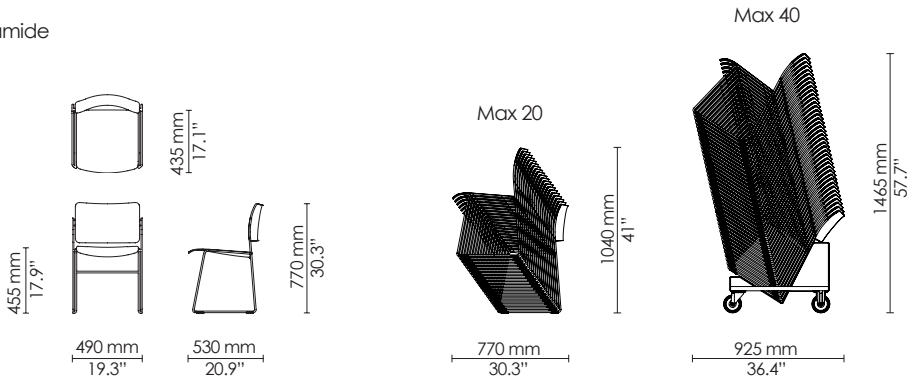

Armchair
Veneer/Polyamide

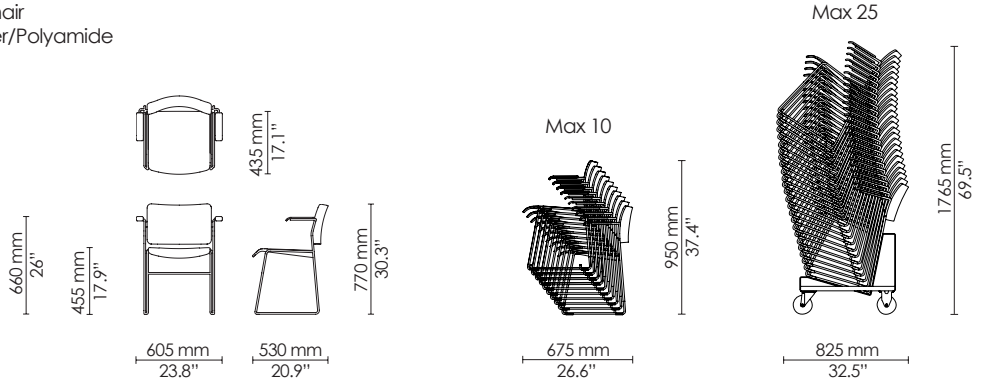

Xtra
Veneer

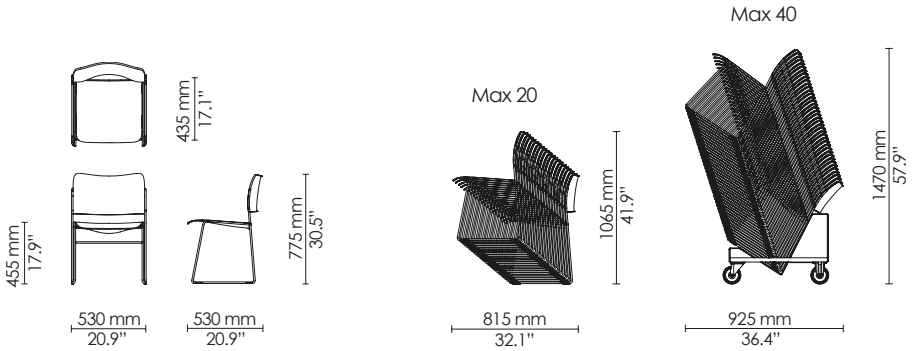

Lounge
Veneer

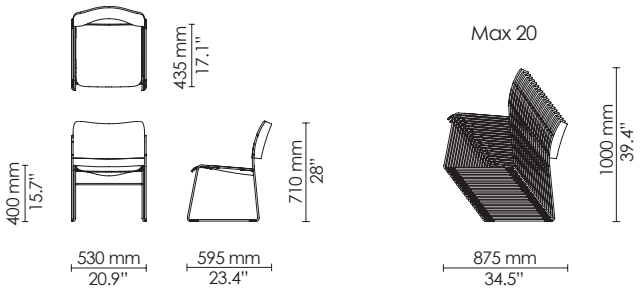

HOWE

Side chair
Seat upholstered

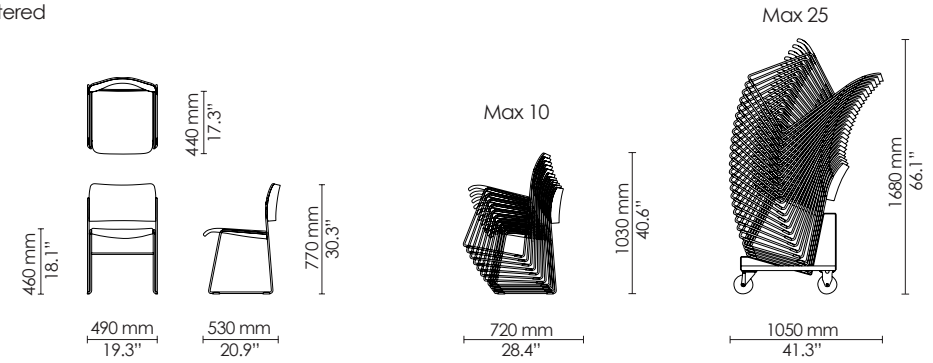

Armchair
Seat upholstered

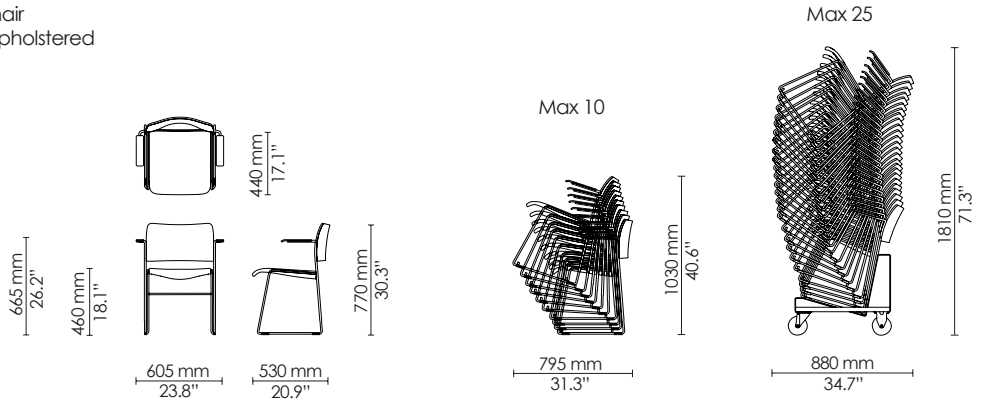

Xtra
Seat upholstered

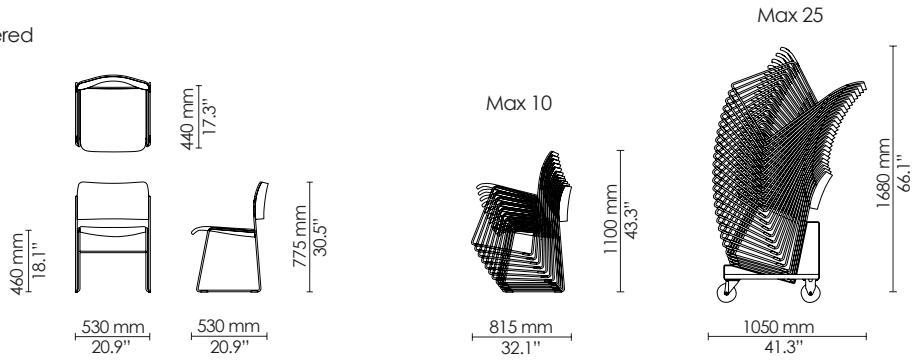

Slim Armchair
Seat upholstered

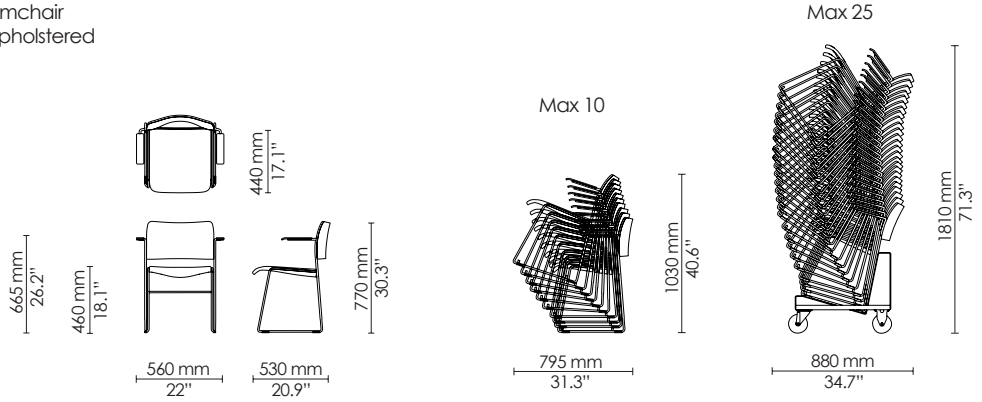

Side chair
Fully upholstered

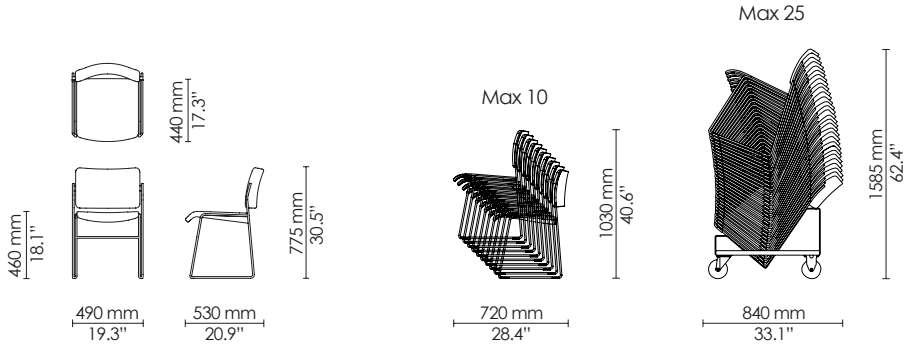

Armchair
Fully upholstered

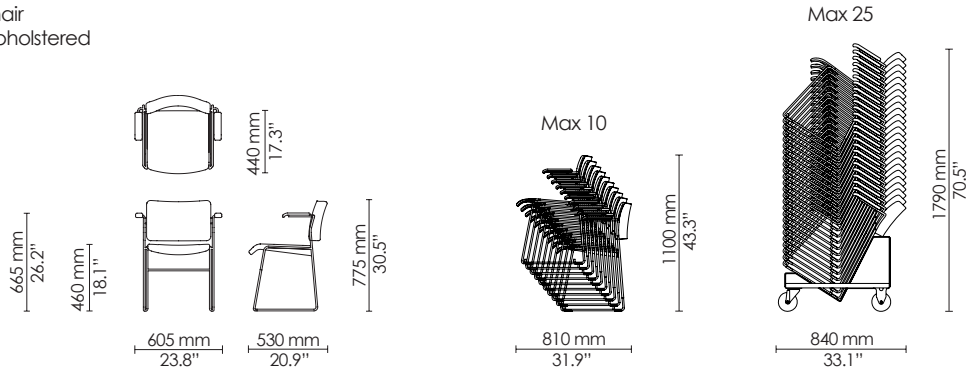

Xtra
Fully upholstered

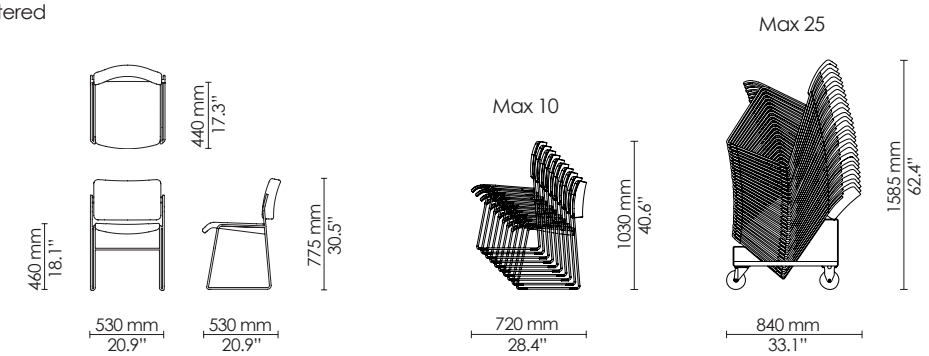

Lounge
Fully upholstered

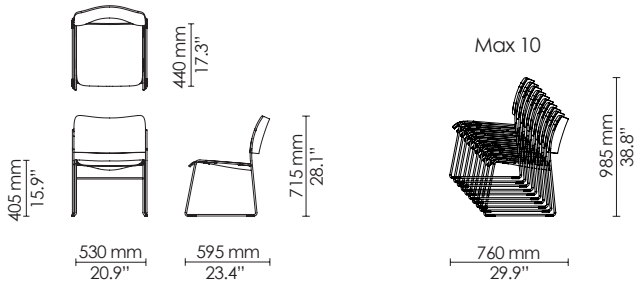

Wood frame - side chair

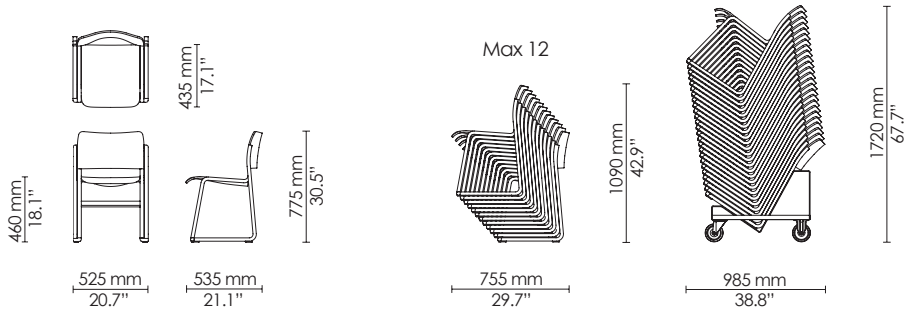

Wood frame - side chair
Seat upholstered

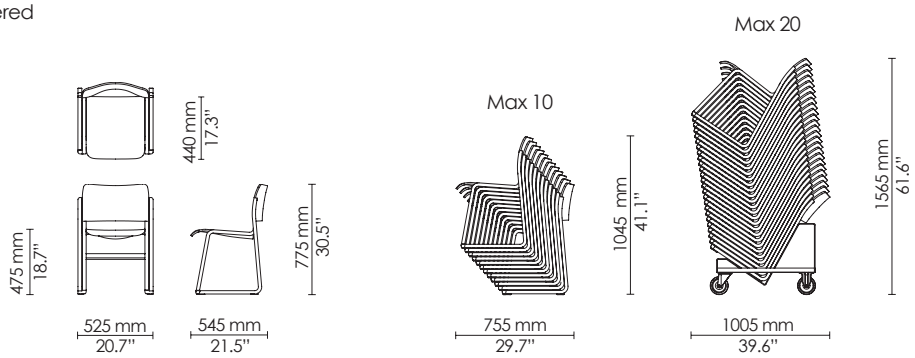

Chair dolly
- Single
- Double
- Triple
- Quadruple

*Applicable for side chairs
Veneer/Polyamide

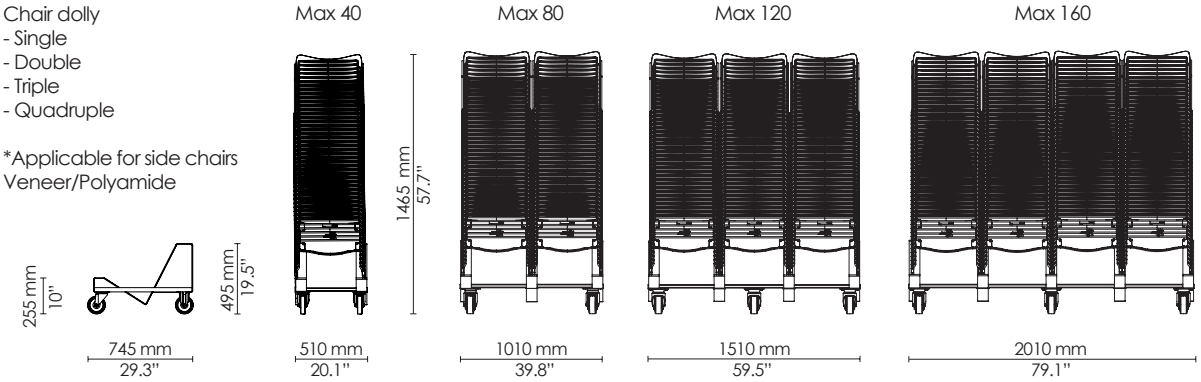

*Contact HOWE for information on dollies for other 40/4 chair versions

Side chair - with writing tablet

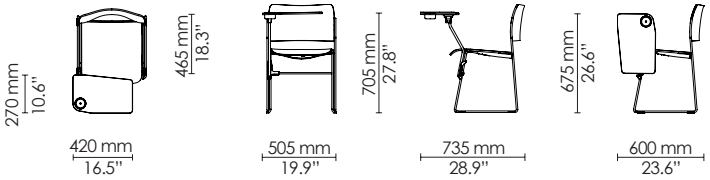

Armchair - with writing tablet

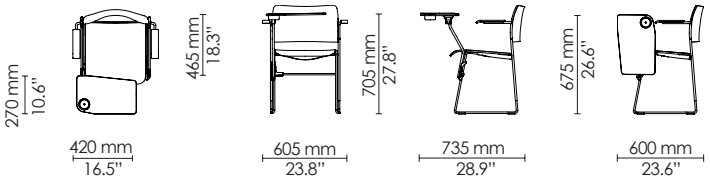

Linked chairs
- Brace linking
- Eye/hook linking
- Arm linking

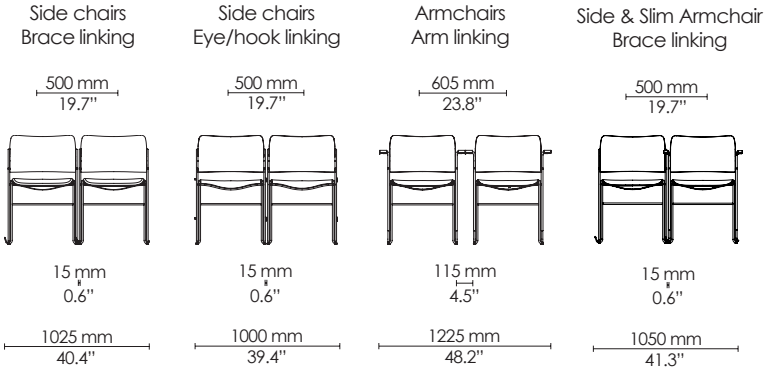

Barstool
Veneer/Polyamide

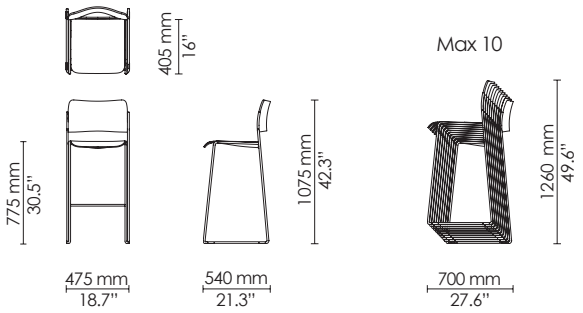

Barstool - counter height
Veneer/Polyamide

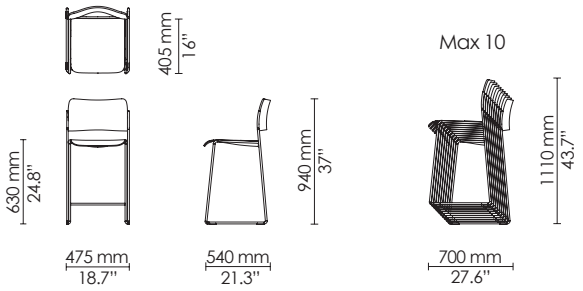

Barstool
Fully upholstered

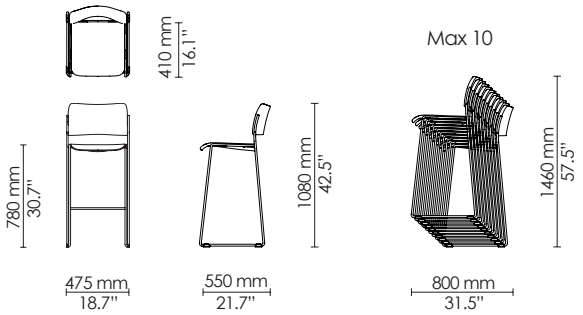

Barstool - counter height
Fully upholstered

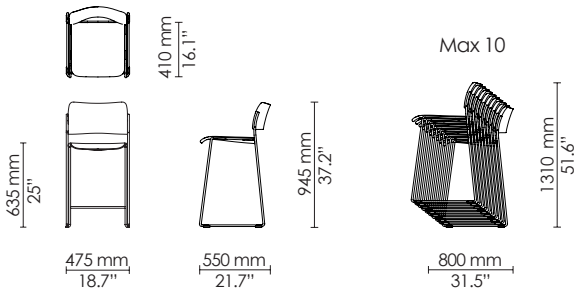

Swivel - side chair
Veneer/Polyamide

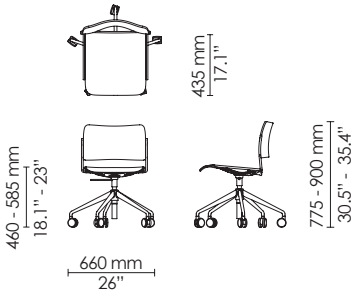

Swivel - armchair
Veneer/Polyamide

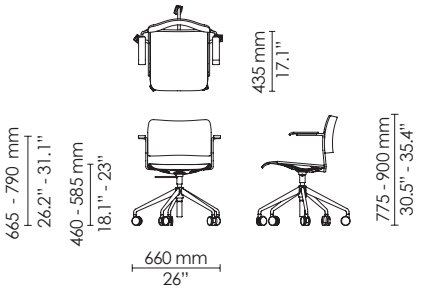

Swivel - side chair
Fully upholstered

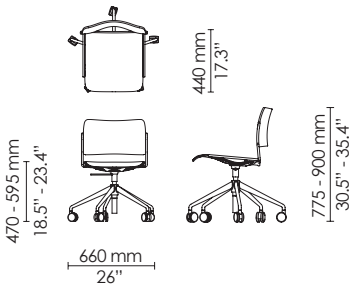
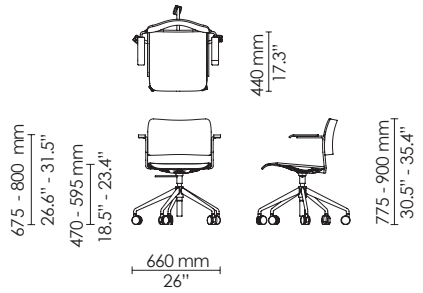
Swivel - armchair
Fully upholstered